# Lecture 10: Threads

Prof. G. Sandoval

Some slides adapted by G. Sandoval for CS3224, from Tanenbaum & Bo, and Junfeng Yang from Columbia

# Outline

- Thread definition
- Multithreading models
- Synchronization

# Threads

- Threads: separate streams of executions that share an address space
  - Allows one process to have multiple point of executions, can potentially use multiple CPUs
- Thread control block (TCB)
  - Program counter (EIP on x86)
  - Other registers
  - Stack
- Very similar to processes, but different

# Single and multithreaded processes

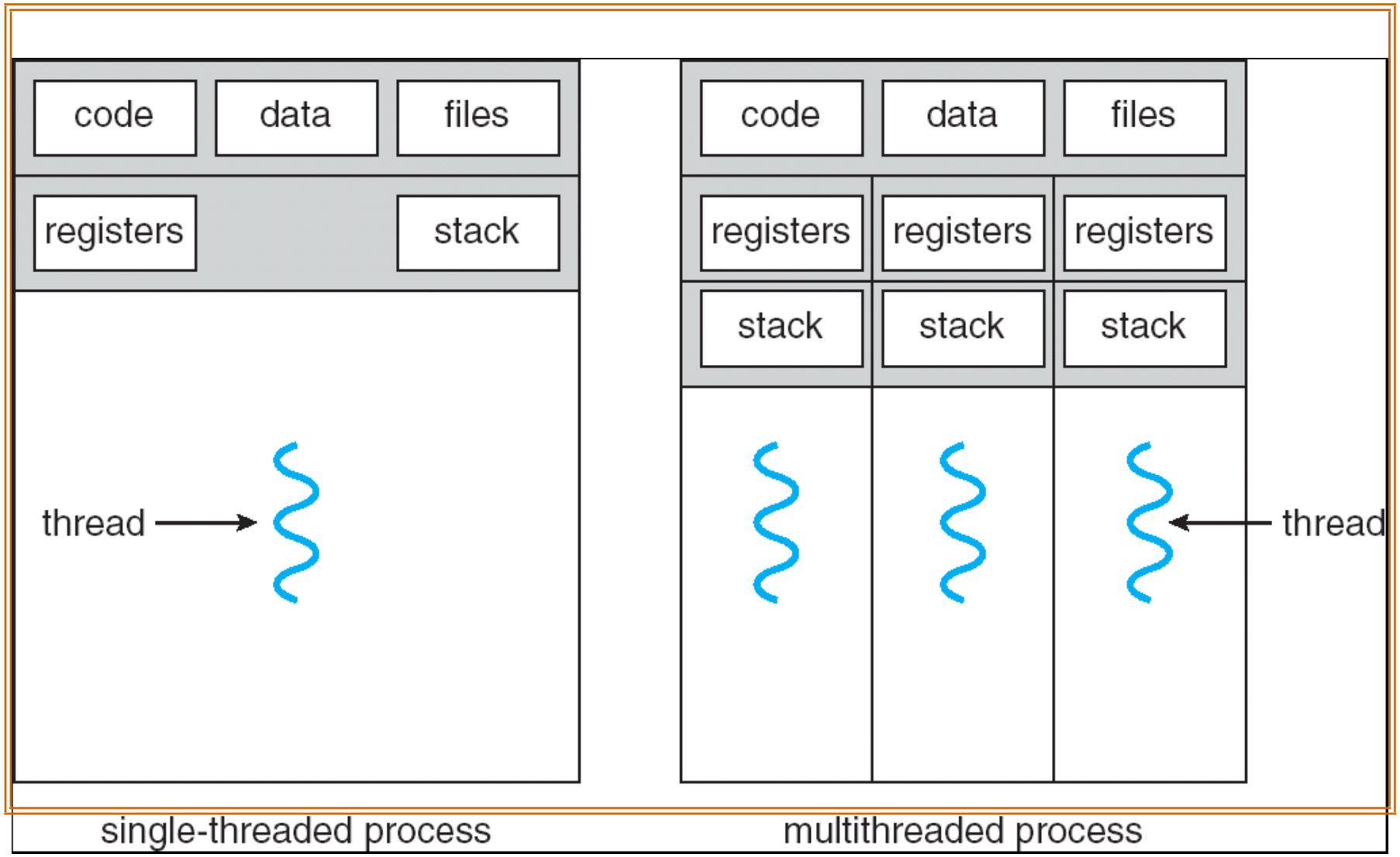


Threads in one process share code, data, files, …

# Why threads?

- Express concurrency
  - Web server (multiple requests), Browser (GUI + network I/O + rendering), …

```
for(;;) {
    struct request *req = get_request();
    create_thread(process_request, req);
}
```

- Efficient communication
  - Using a separate process for each task can be heavyweight

# Threads vs. Processes

- A thread has no data segment or heap
- A thread cannot live on its own, it must live within a process
- There can be more than one thread in a process, the first thread calls main() & has the process's stack
- Inexpensive creation
- Inexpensive context switching
- Efficient communication
- If a thread dies, its stack is reclaimed

- A process has code/data/heap & other segments
- A process has at least one thread
- Threads within a process share code/data/heap, share I/O, but each has its own stack & registers
- Expensive creation
- Expensive context switching
- Interprocess communication can be exprnsive
- If a process dies, its resources are reclaimed & all threads die

# Using threads

- Through thread library
  - E.g. pthread, Win32 thread
- Common operations
  - create/terminate
  - suspend/resume
  - priorities and scheduling
  - synchronization

# Example pthread functions

- int pthread_create(pthread_t *thread, const pthread_attr_t *attr, void *(*start_routine)(void*), void *arg);
  - Create a new thread to run start_routine on arg
  - thread holds the new thread's id
  - Can be customized via attr

- int pthread_join(pthread_t thread, void **value_ptr);
  - Wait for thread termination, and retrieve return value in value_ptr

- void pthread_exit(void *value_ptr);
  - Terminates the calling thread, and returns value_ptr to threads waiting in pthread_join

# pthread creation example

```
void* thread_fn(void *arg)
{
        int id = (int)arg; printf("thread
        %d runs\n", id);
        return NULL;
}
int main()
{
        pthread_t t1, t2;
        pthread_create(&t1, NULL, thread_fn, (void*)1);
        pthread_create(&t2, NULL, thread_fn, (void*)2);
        pthread_join(t1, NULL);
        pthread_join(t2, NULL);
        return 0;
}
```

```
$ gcc –o threads threads.c –Wall –lpthread
$ threads
thread 1 runs
thread 2 runs
```

One way to view threads: function calls, except caller doesn't wait for callee; instead, both run concurrently

# In your own words explain a thread...

Powered by Poll Everywhere

Start the presentation to see live content. For screen share software, share the entire screen. Get help at **pollev.com/app**

# Outline

- Thread definition
- Multithreading models
- Synchronization

# Multithreading models

- Where to support threads?
- User threads: thread management done by user-level threads library; kernel knows nothing
- Kernel threads: threads directly supported by the kernel
  - Virtually all modern OS support kernel threads

# User vs. Kernel Threads

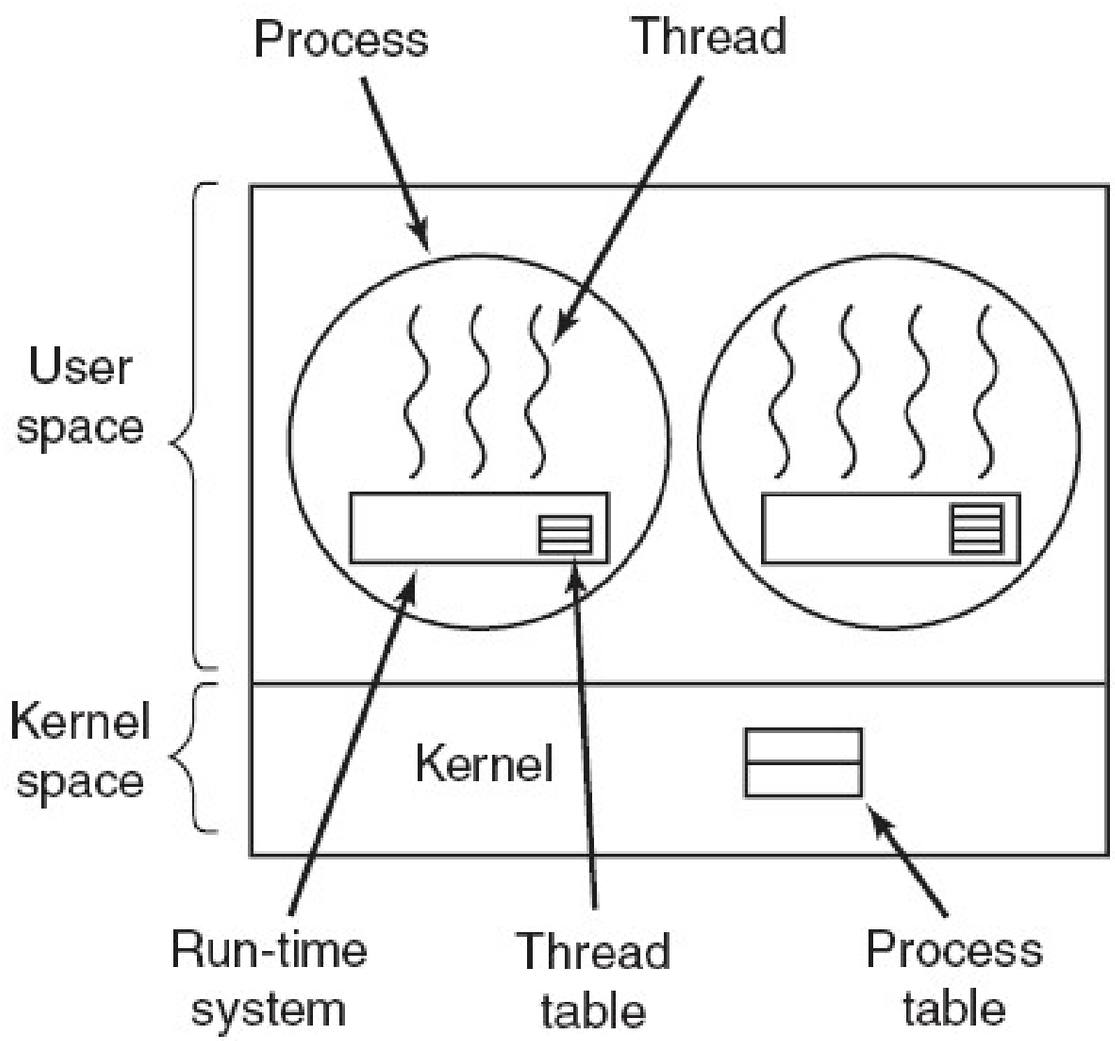


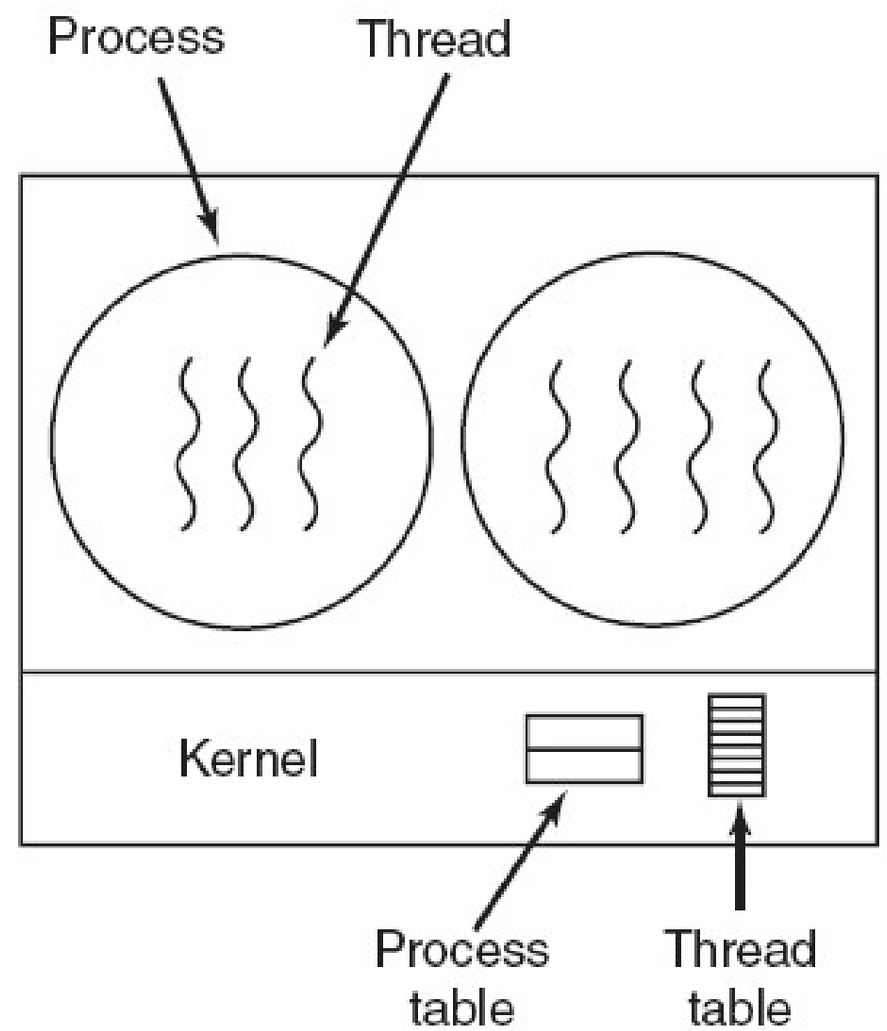


Example from Tanenbaum, Modern Operating Systems 3 e,
(c) 2008 Prentice-Hall, Inc. All rights reserved. 0-13-**6006639**

# User vs. Kernel Threads (cont.)

- Pros: fast, no system call for creation, context switch
- Cons: kernel doesn't know -> one thread blocks, all threads in the process blocks

- Cons: slow, kernel does creation, scheduling, etc
- Pros: kernel knows -> one thread blocks, schedule another

No free lunch!

# Multiplexing User-Level Threads

- A thread library must map user threads to kernel threads
- Big picture:
  - kernel thread: physical concurrency, how many cores?
  - User thread: application concurrency, how many tasks?
- Different mappings exist, representing different tradeoffs
  - Many-to-One: many user threads map to one kernel thread, i.e. kernel sees a single process
  - One-to-One: one user thread maps to one kernel thread
  - Many-to-Many: many user threads map to many kernel threads

# Many-to-One

- Many user-level threads map to one kernel thread
- Pros
  - Fast: no system calls required
  - Portable: few system dependencies
- Cons
  - No parallel execution of threads
    - All thread block when one waits for I/O

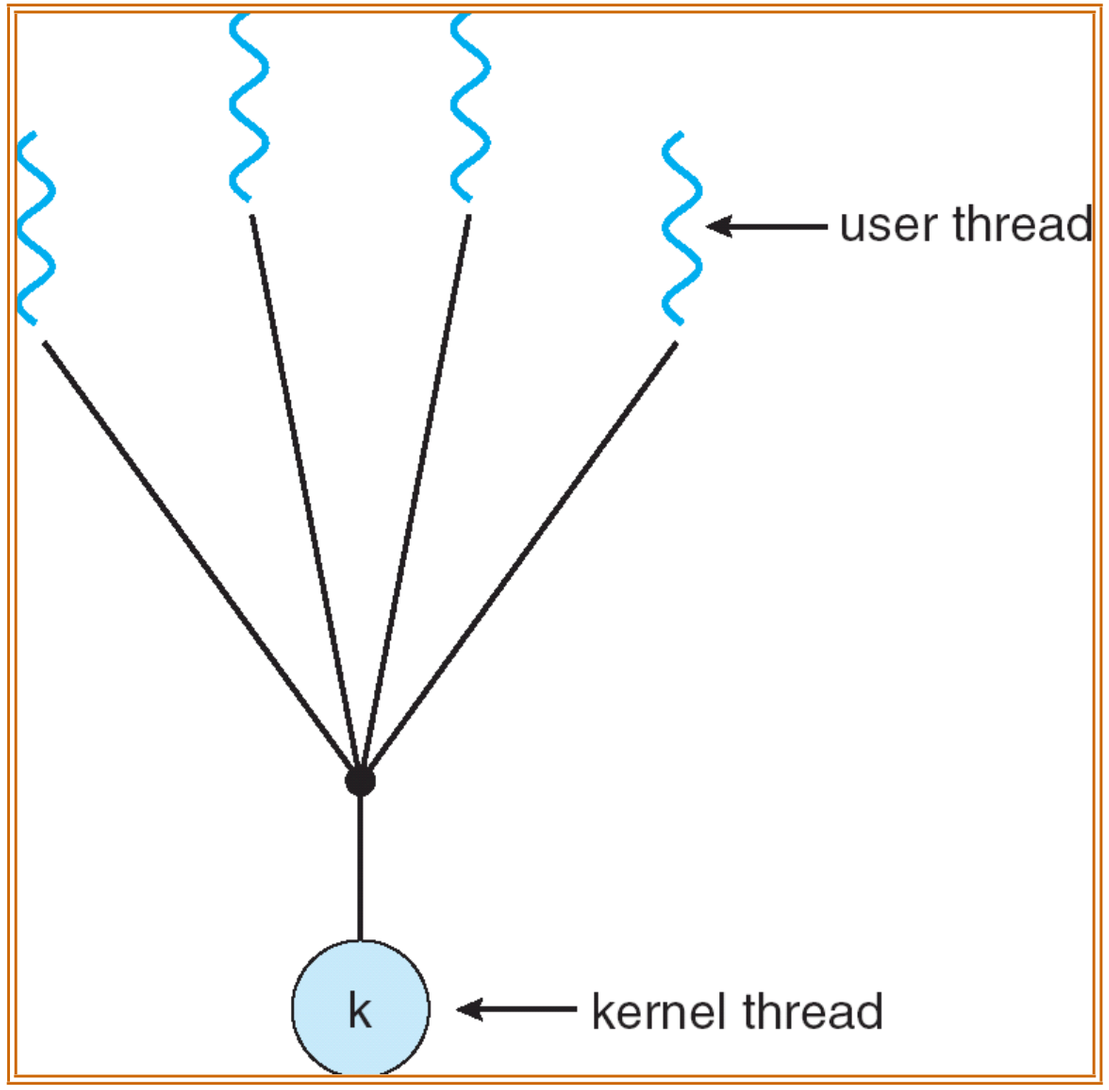

# One-to-One

- One user-level thread maps to one kernel thread
- Pros: more concurrency
  - When one blocks, others can run
  - Better multicore or multiprocessor performance
- Cons: expensive
  - Thread operations involve kernel
  - Thread need kernel resources

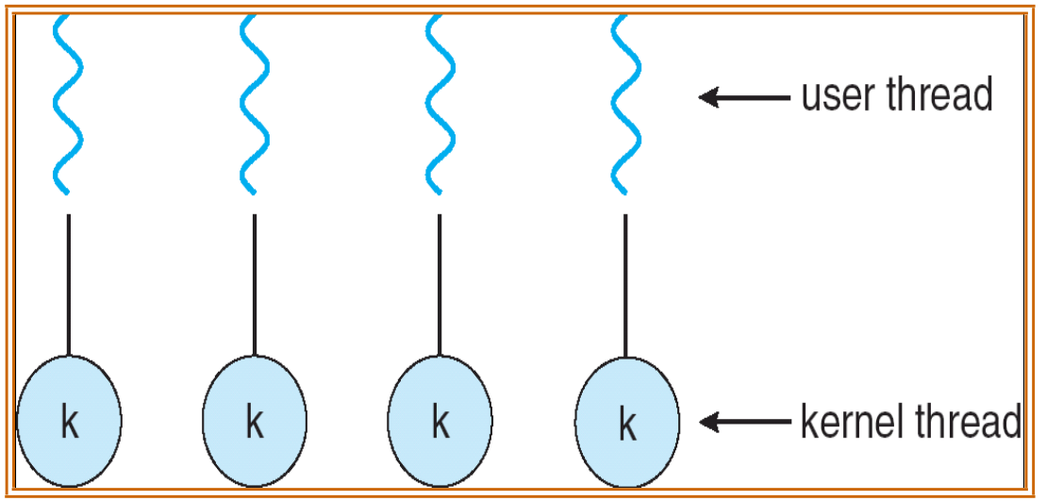

# Many-to-Many

- Many user-level threads map to many kernel threads (U >= K)
  - Supported some versons of BSD, and Windows
- Pros: flexible
  - OS creates kernel threads for physical concurrency
  - Applications creates user threads for application concurrency
- Cons: complex
  - Most programs use 1:1 mapping anyway

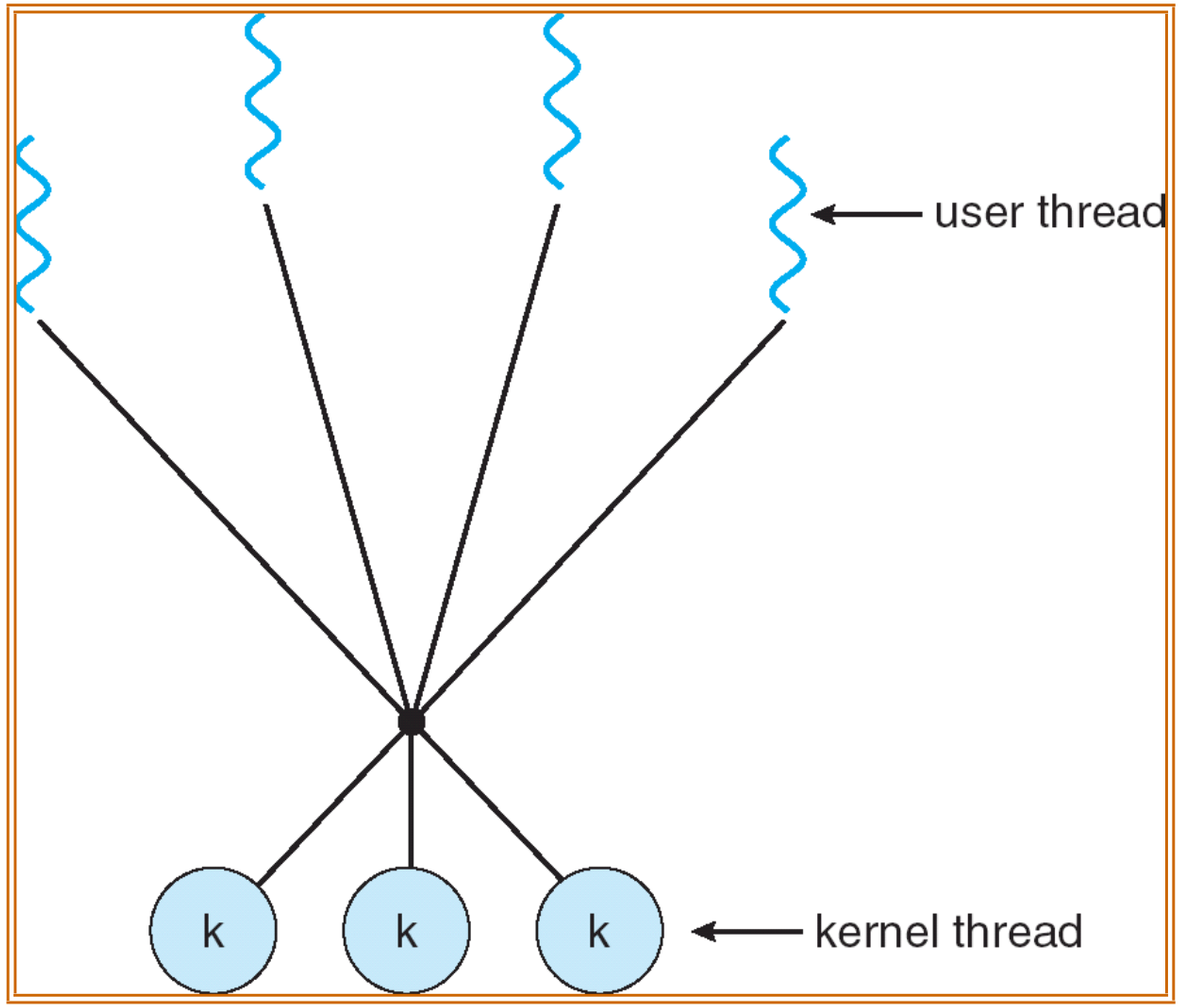

# Two-level

- Similar to M:M, except that a user thread may be bound to kernel thread

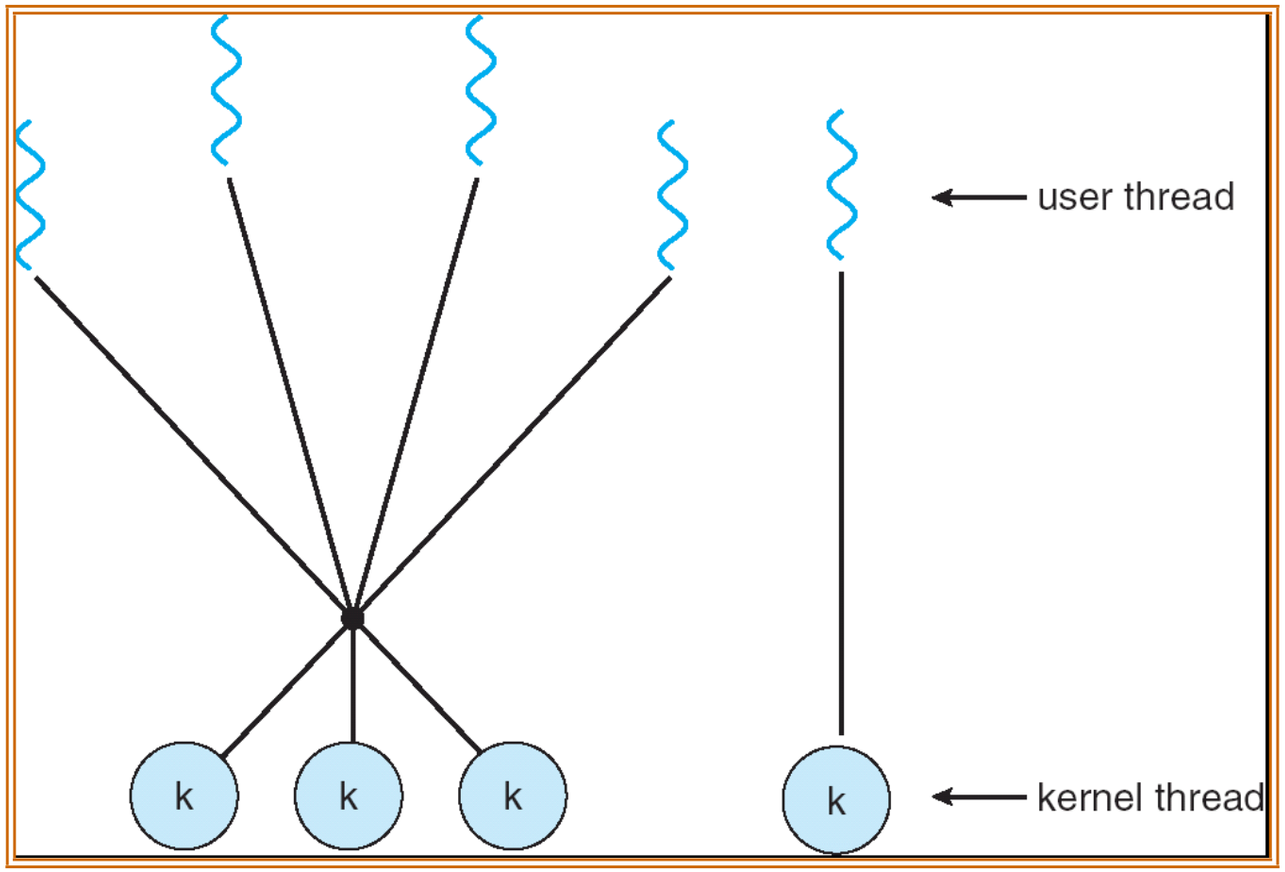

# Other thread design issues

- Semantics of fork() system calls
  - Does fork() duplicate only the calling thread or all threads?
    - Running threads? Threads trapped in system call?
  - Linux fork() copies only the calling thread
- Signal handling
  - Which thread to deliver signals to?
  - Segmentation fault kills process or thread?

# Thread pool

- Problem:
  - Creating a thread for each request: costly
    - And, the created thread exits after serving a request
  - More user request -> More threads, server overload
- Solution: thread pool
  - Pre-create a number of threads waiting for work
  - Wake up thread to serve user request --- faster than thread creation
  - When request done, don't exit --- go back to pool
  - Limits the max number of threads

# Outline

- Thread definition
- Multithreading models
- Synchronization

# Banking example

```
int balance = 0;
int main()
{
        pthread_t t1, t2;
        pthread_create(&t1, NULL, deposit, (void*)1);
        pthread_create(&t2, NULL, withdraw, (void*)2);
        pthread_join(t1, NULL);
        pthread_join(t2, NULL);
        printf("all done: balance = %d\n", balance);
        return 0;
    }
```

```
void* deposit(void *arg)
{
        int i;
        for(i=0; i<1e7; ++i)
                ++ balance;
}
```

```
void* withdraw(void *arg)
{
        int i;
        for(i=0; i<1e7; ++i)
                -- balance;
}
```

# Results of the banking example

```
$ gcc –Wall –lpthread –o bank bank.c
$ bank
all done: balance = 0
$ bank
all done: balance = 140020
$ bank
all done: balance = -94304
$ bank
all done: balance = -191009
```

Why?

# A closer look at the banking example

```
$ objdump –d bank
…
08048464 <deposit>:
…                                   // ++ balance
8048473:  a1 80 97 04 08            mov    0x8049780,%eax
8048478:  83 c0 01                  add    $0x1,%eax
804847b:  a3 80 97 04 08            mov    %eax,0x8049780
…

0804849b <withdraw>:
…                                   // -- balance
80484aa:  a1 80 97 04 08            mov    0x8049780,%eax
80484af:  83 e8 01                  sub    $0x1,%eax
80484b2: a3 80 97 04 08             mov    %eax,0x8049780
…
```

# One possible schedule

| CPU 0 | | CPU 1 |
|---|---|---|
| | balance: 0 | |
| mov 0x8049780,%eax | | |
| | eax0: 0 | |
| add $0x1,%eax | | |
| | eax0: 1 | |
| mov %eax,0x8049780 | | |
| | balance: 1 | |
| | | mov 0x8049780,%eax |
| | eax1: 1 | |
| | | sub $0x1,%eax |
| | eax1: 0 | |
| | | mov %eax,0x8049780 |
| | balance: 0 | |

time

One deposit and one withdraw,
balance unchanged. Correct

# Another possible schedule

| CPU 0 | | CPU 1 |
|---|---|---|
| | balance: 0 | |
| mov 0x8049780,%eax | | |
| | eax0: 0 | |
| add $0x1,%eax | | |
| | eax0: 1 | |
| | | mov 0x8049780,%eax |
| | eax1: 0 | |
| mov %eax,0x8049780 | | |
| | balance: 1 | |
| | | sub $0x1,%eax |
| | eax1: -1 | |
| | | mov %eax,0x8049780 |
| | balance: -1 | |

time

One deposit and one withdraw,
balance becomes less. Wrong!

# Race condition

- Definition: a timing dependent error involving shared state
- Can be very bad
  - "non-deterministic:" don't know what the output will be, and it is likely to be different across runs
  - Hard to detect: too many possible schedules
  - Hard to debug: "heisenbug," debugging changes timing so hides bugs (vs "bohr bug" always happens ☺ )

# How to avoid race conditions?

- **Atomic operations**: no other instructions can be interleaved, executed "as a unit" "all or none", guaranteed by hardware
- A possible solution: create a super instruction that does what we want atomically
  - add $0x1, 0x8049780
- Problem
  - Can't anticipate every possible way we want atomicity
  - Increases hardware complexity, slows down other instructions

```
// ++ balance
mov    0x8049780,%eax
add    $0x1,%eax
mov    %eax,0x8049780
...
```

```
// -- balance
mov    0x8049780,%eax
sub    $0x1,%eax
mov    %eax,0x8049780
...
```

# Layered approach to synchronization

- Hardware provides simple **low-level atomic operations**,
- upon which we can build **high-level, synchronization primitives**
- upon which we can implement **critical sections** and **build correct multi-threaded**/multi-process programs

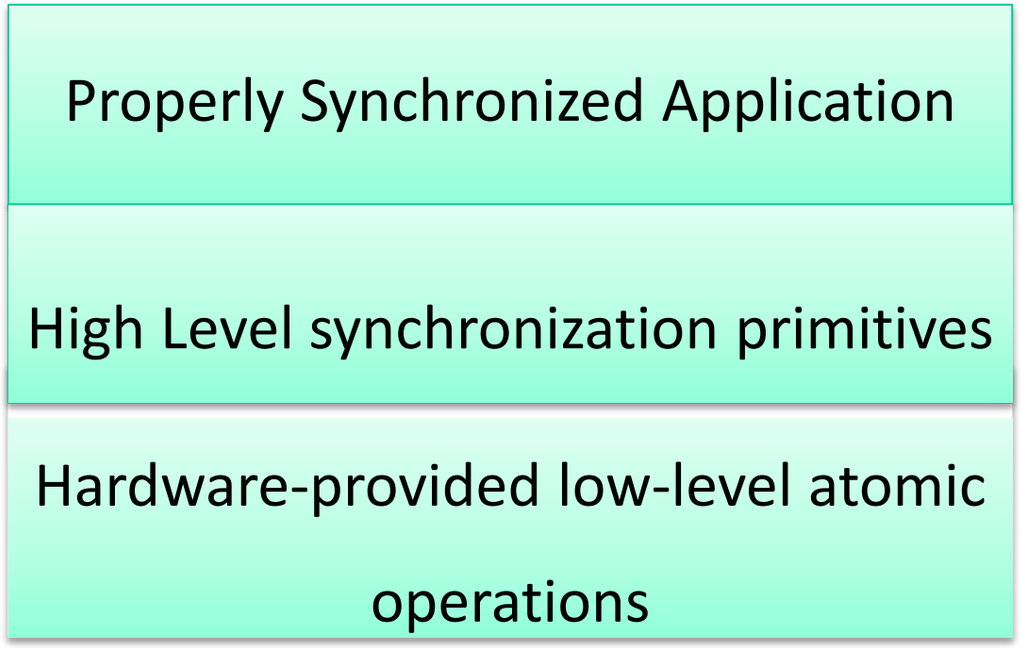

# Example synchronization primitives

- Low-level atomic operations
  - On uniprocessor, disable/enable interrupt
  - On x86, aligned load and store of words
  - Special instructions:
    - test-and-set (TSL), compare-and-swap (XCHG)

- High-level synchronization primitives
  - Lock
  - Semaphore
  - Monitor